BANGLADESH UNIVERSITY OF ENGINEERING AND TECHNOLOGY
DEPARTMENT OF ELECTRICAL AND ELECTRONIC ENGINEERING

# EEE 304 (January 2024)

Digital Electronics Laboratory

# Final Project Report

**Section: C1 | Group: 08**

## Tic-Tac-Toe game using basic gates and flip flops

## Course Instructors:

Jawad Ul Islam, EEE, BUET
Md. Meherab Hossain, EEE, BUET
Khairul Islam, EEE, BUET

**Signature of Instructor:** _____

## Academic Honesty Statement:

*"In signing this statement, We hereby certify that the work on this project is our own and that we have not copied the work of any other students (past or present), and cited all relevant sources while completing this project. We understand that if we fail to honor this agreement, We will each receive a score of ZERO for this project and be subject to failure of this course."*

| | |
|---|---|
| **Signature:** Jaied<br>**Full Name: Md. Jaied Hasan**<br>**Student ID: 2006146** | **Signature:** Parvez<br>**Full Name: Md. Moshahed Parvez**<br>**Student ID: 2006148** |
| **Signature:** _____<br>**Full Name: Nafis Ahmad**<br>**Student ID: 2006149** | **Signature:** Sadsami<br>**Full Name: Sad Sami**<br>**Student ID: 2006150** |

# Table of Contents


1 Abstract ..... 1
2 Introduction ..... 1
3 Design ..... 2
3.1 Problem Formulation ..... 2
3.1.1 Identification of Scope ..... 2
3.1.2 Literature Review ..... 2
3.1.3 Formulation of Problem ..... 3
3.2Design Method ..... 4
3.3Circuit Diagram ..... 9
3.4Simulation Model ..... 9
3.5 Hardware Design ..... 10
4 Implementation ..... 11
4.1 Description ..... 11
5 Design Analysis and Evaluation ..... 13
5.1 Novelty ..... 13
5.2 Design Considerations ..... 13
5.2.1 Considerations to public health and safety ..... 13
5.2.2 Considerations to environment ..... 13
5.2.3 Considerations to cultural and societal needs ..... 13
5.3 Limitations of Tools ..... 14
5.4 Sustainability Evaluation ..... 14
6 Reflection on Individual and Team work ..... 14
6.1 Mode of TeamWork ..... 15
6.2 Diversity Statement of Team ..... 15
6.3 Log Book of Project Implementation ..... 15
7 Communication to External Stakeholders ..... 16
7.1 Executive Summary ..... 16
7.2 User Manual ..... 17
8 Project Management and Cost Analysis ..... 18
8.1 Bill of Materials ..... 18
8.2 Timeline of Project Implementation ..... 18
9 Future Work ..... 19

**10 References ..... 21**

# 1 Abstract

This project presents the design and implementation of a **Tic Tac Toe game** using digital logic components. The project employs a total of 36 integrated circuits (ICs), including D flip-flops, AND gates, NOR gates, NOT gates, XOR gates, and 7-segment counters. The game board is represented visually using a 3x3 matrix of bi-color LEDs, where each color corresponds to one of the two players. Players interact with the game using 9 pushbuttons for making moves and an additional pushbutton to reset the game. Two 7-segment displays are used to keep track of each player's score. Our design emphasizes reliability and simplicity, leveraging fundamental digital electronic principles to create an engaging interactive experience. The project demonstrates practical applications of combinational and sequential logic circuits, successfully achieving the intended functionality.

# 2 Introduction

Tic Tac Toe, a classic two-player game, offers a unique opportunity to explore the design and implementation of digital systems using logic circuits. The primary challenge of this project lies in designing a functional and efficient circuit to simulate the game, meeting the requirements of real-time interaction, scorekeeping, and visual feedback. This task presents itself as a Complex Engineering Problem due to its multidisciplinary nature, involving combinational and sequential logic, user interaction, and system integration.

The complexity arises from integrating multiple ICs to ensure accurate game logic, synchronizing user inputs with LED displays, and maintaining the functionality of scoreboards. Furthermore, the design must accommodate conditions such as game resets and simultaneous move detection, ensuring robustness and error-free operation.

Alternative solutions to the problem include microcontroller-based implementations, which would reduce hardware complexity but shift the focus to software programming. However, such solutions would deviate from the objective of mastering digital logic design. Another approach could involve programmable logic devices (PLDs), which allow for flexible reconfigurations but require specialized tools and training. By using discrete ICs, our project retains a hands-on approach, allowing for a deeper understanding of fundamental digital circuits and their practical applications.

The resulting design successfully integrates combinational logic for move validation, sequential logic for state retention, and scoring mechanisms, highlighting the application of theoretical knowledge to solve real-world problems.

# 3 Design

## 3.1 Problem Formulation

### 3.1.1 Identification of Scope

The project focuses on the design and implementation of a **Tic Tac Toe game** using fundamental digital logic components. The scope includes:

1. **Game Implementation Using Digital Circuits**:
   - Designing the game logic with discrete ICs (AND, NOR, XOR, D flip-flops).
   - Implementing move validation and state retention for a 3x3 matrix game board.
2. **Interactive User Interface**:
   - Utilizing bi-color LEDs to represent player moves.
   - Employing pushbuttons for player inputs and a reset function.
3. **Real-Time Scorekeeping**:
   - Integrating CD4026 ICs and 7-segment displays for visual score tracking.
   - Ensuring accurate score updates after each game round.
4. **Error Detection and Prevention**:
   - Detecting illegal moves (repeated button presses) and maintaining game integrity.
   - Disabling further moves once a winner is declared.
5. **Educational Objective**:
   - Highlighting practical applications of combinational and sequential logic.
   - Demonstrating the integration of basic digital components to achieve a complex system.
6. **Robust and Flexible Design**:
   - Allowing for easy debugging and modular testing of individual circuits.
   - Ensuring the system functions reliably under various user interactions.

This scope avoids reliance on microcontrollers or programmable devices, aligning the project with the goal of mastering discrete digital logic design. It provides a comprehensive hands-on experience in digital electronics, emphasizing foundational principles while achieving a fully functional gaming system.

### 3.1.2 Literature Review

The development of this project involved a detailed analysis of the behaviours and applications of various logic gates and integrated circuits (ICs) used in digital systems. Below are the key components and their functionalities:

1. **2-Input AND Gate**: Outputs a high signal only when both inputs are high. Used in our project to implement conditional logic for detecting valid moves.
2. **3-Input AND Gate**: Extends the logic of the 2-input AND gate to three inputs, allowing for more complex conditions such as simultaneous player moves.
3. **2-Input XOR Gate**: Outputs a high signal when the inputs differ. It is used to toggle between player turns and validate unique moves.

4. **3-Input NOR Gate**: Outputs a high signal only when all inputs are low. It is utilized in the circuit to handle specific conditions where no inputs should activate simultaneously.
5. **8-Input NOR Gate**: Extends the logic of the 3-input NOR gate to handle multiple conditions, ensuring error-free game resets.
6. **NOT Gate**: Inverts the input signal. Critical for complementing signals in decision-making circuits.
7. **D Flip-Flops**: Acts as memory elements, storing the state of the game board and ensuring proper synchronization between inputs and outputs.
8. **CD4026 IC**: A 7-segment display driver used for scorekeeping, simplifying the interface between the logic circuit and the visual display.
9. **7-Segment Display**: Provides a visual representation of scores, making the game intuitive for players.

In our literature review, we found that most existing implementations of Tic Tac Toe games are microcontroller-based, relying heavily on programmable logic and software code. These designs simplify hardware requirements but shift the complexity to software, which deviates from the educational objective of exploring fundamental digital logic. While microcontroller-based designs are flexible and compact, they lack the hands-on experience of building circuits using discrete ICs.

By contrast, our project emphasizes the use of traditional logic circuits to develop a fully functional game. This approach not only demonstrates the practical applications of theoretical concepts but also provides a tangible understanding of how digital systems operate.

### 3.1.3 Formulation of Problem

To successfully implement all the game rules, we need to focus on the following key points:

1. If player 1 pushes a button, then the LED with color A will be lit up, and if player 2 pushes a button, then the LED with color B will be lit up.

2. If a player pushes a button after pushing that same button previously, the corresponding LED state should not change. This move should be considered illegal, and the player must push another button that has not been pressed yet.

3. If the game is over (a winner is found), no other buttons should work.

4. If player 1 wins the game, the LED with color A will be lit up. If player 2 wins, the LED with color B will be lit up. If no player wins the game, another LED with color C will be lit up, indicating the game is a draw.

5. There should be a RESTART button that can be used to start a new game.

6. A scorecard will show the score of each player. It needs to be updated as soon as a winner is declared.

## 3.2 Design Method

Here is a step by step breakdown of the design process of the project

1. **Taking inputs**

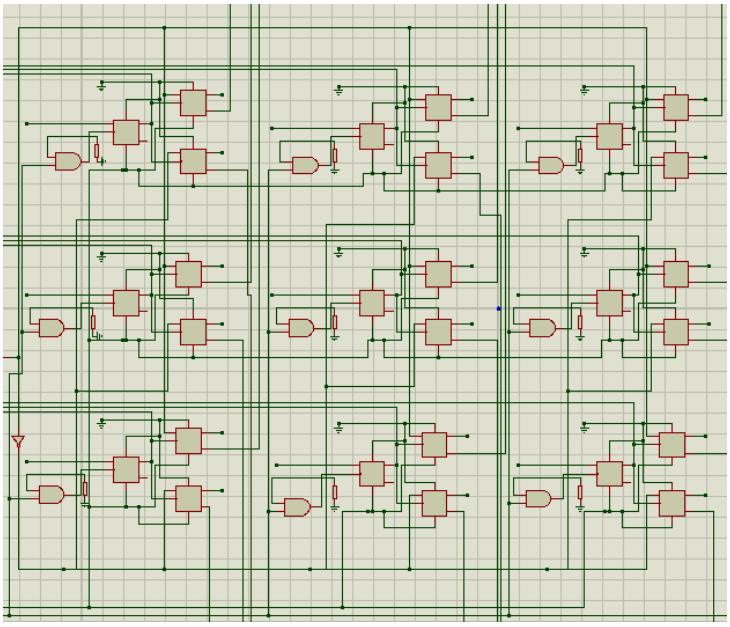

*Fig: input block*

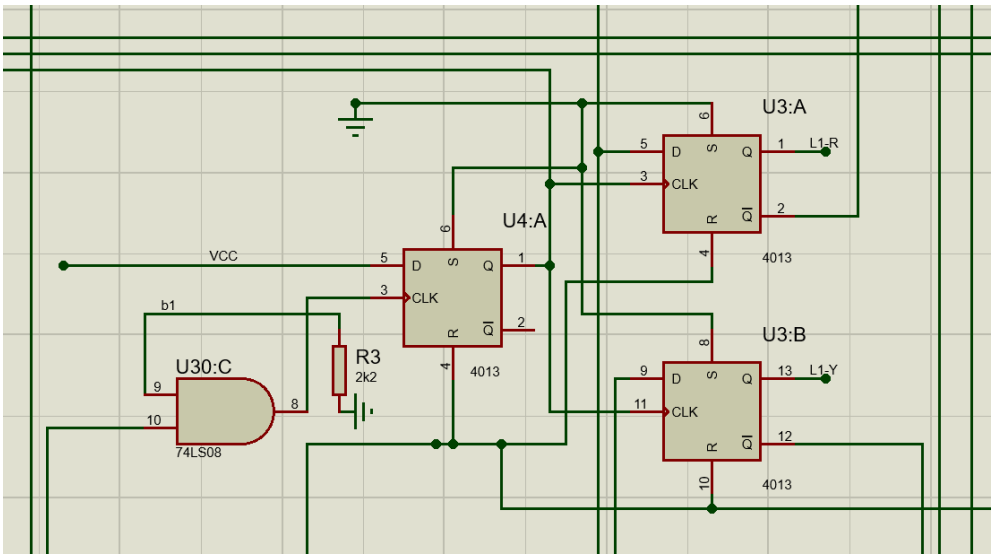


*Fig: one module zoomed in*

We know that in D flip flops, the Q output follows the D whenever it gets a clock edge. We have kept the D pin of the 1st flip flop HIGH. So, as soon as it gets a positive clock edge, Q will be HIGH. We will receive the clock edge through an AND gate. The functionality of the and gate will be discussed later. We have sent the Q output of the 1st flip flop to the clocks of the 2nd and 3rd flip flop.

## 2. Player selector circuit

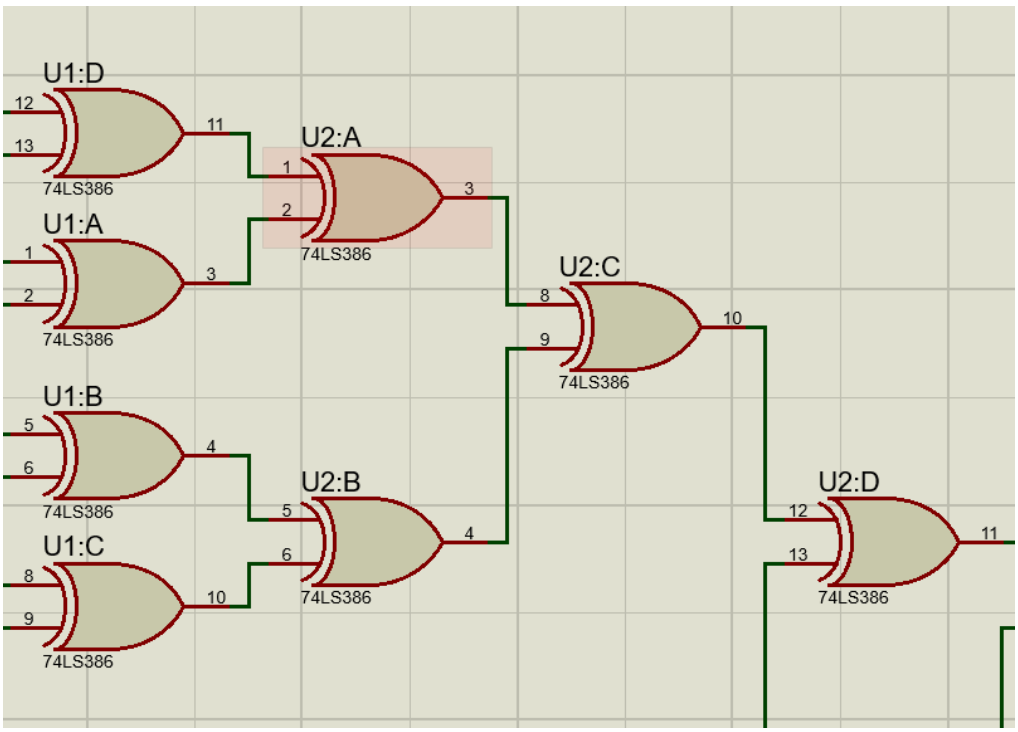


*Fig: XOR gate set for player altering*

There is a set of XOR gates whose task is to alter the colour of led after every move. For example , when no button is pressed, the XOR set outputs 0 and the NOT version outputs 1.

When a button is pressed, the outputs alter and the cycle goes on. When the XOR set outputs 0, we send it to the 2nd flip flop which is responsible for turning on the LED for the 1st player. When the outputs alter, we send the HIGH signal to the 3rd flip flop which lits up the LED for the 2nd player. That's how the player selector circuit works.

## 3. Winner selector circuit

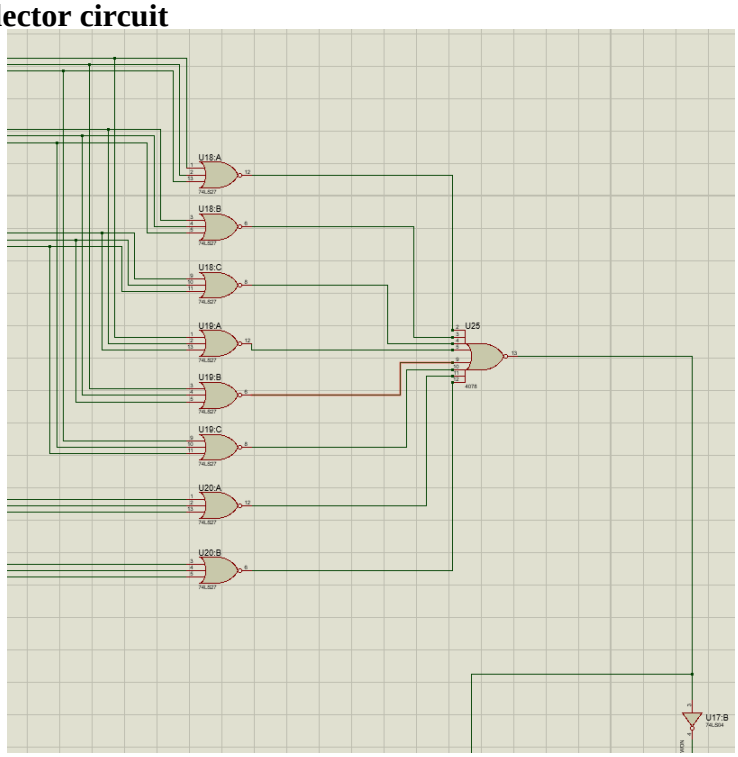


*Fig: Winner selector circuit*

Here in the winner selector circuit the 8 NOR gates represent the 8 combinations by which a player can win. Here we have shown the winner circuit of a player only. If any of the winning combination matches, one of the NOR gates gives 1 as output. The next NOR gates takes it as input and determines which player have won the game. The NOT gate next to NOR gate is used to lit up the bi color LED.

## 4. Draw decider circuit

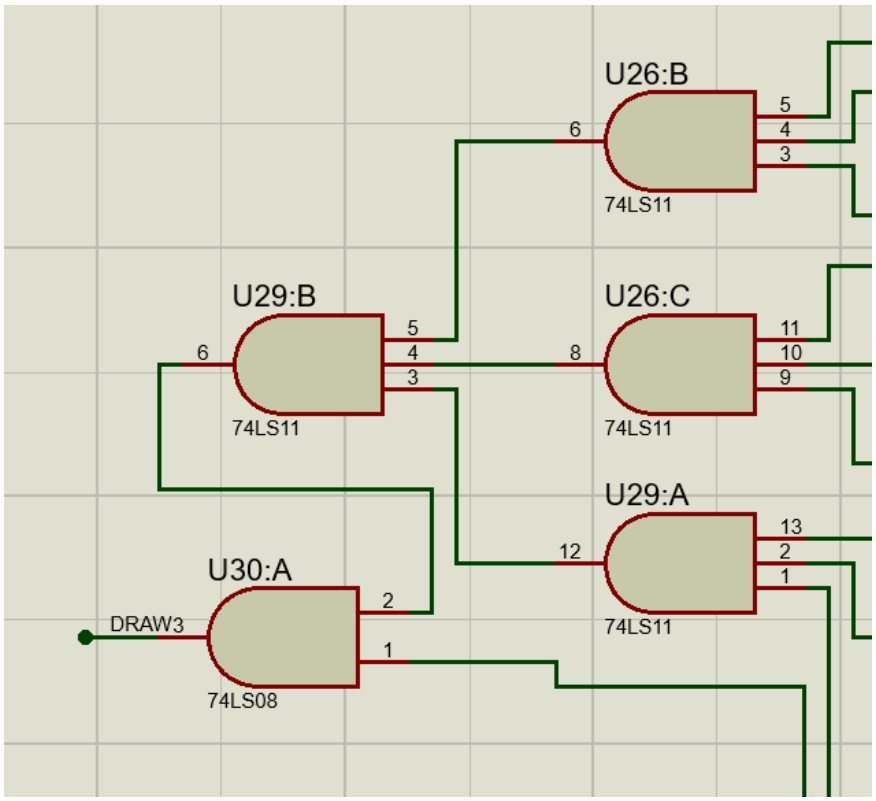


*Fig: Draw decider circuit*

Here the bunch of AND gates give the decision whether the game is drawn or not. It works on the logic that, if all the buttons are pressed and no winner is decided, then the game is drawn. These AND gates implement the logic.

## 5. Scorecard keeping circuit

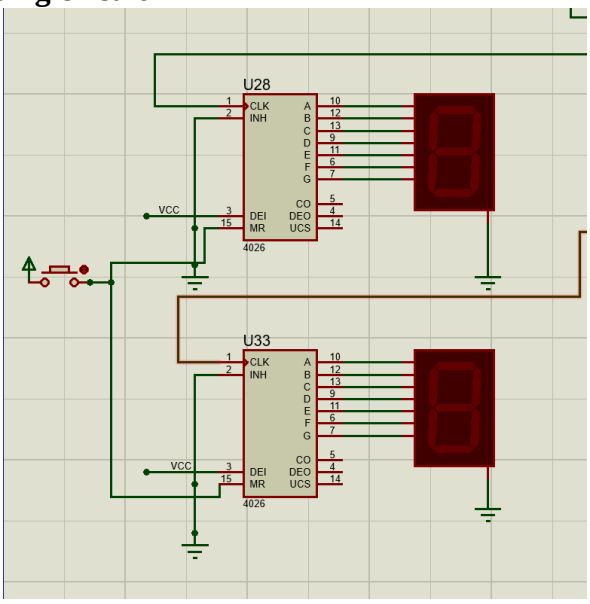


*Fig: Scorecard keeping circuit*

The above circuitry is used to show and continuously update the scorecard. Here we have used two 4026 IC which is used to drive the 7 segment displays. In the clock pin, we have given input of the winner LED. So whenever a winner is decided, the clock of a 4026 IC gets a pulse edge. And the IC basically does the part of counter of the clock pulses.

## 6. The user interface

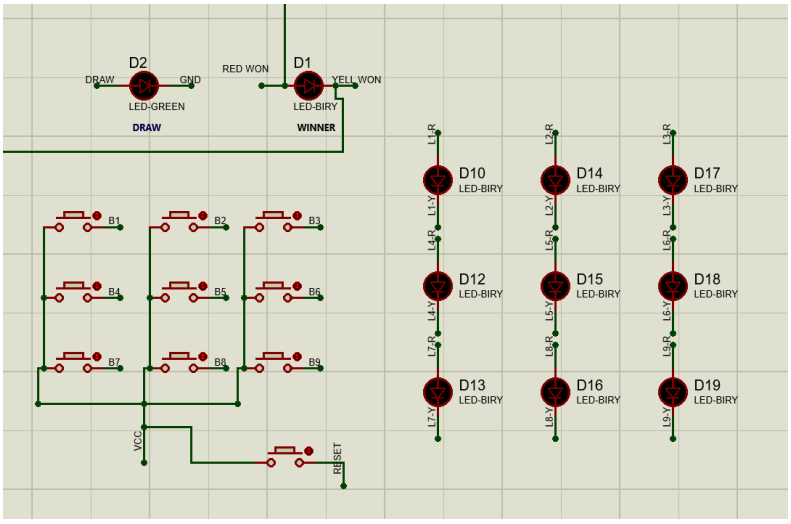


*Fig: the user interface of the game*

And finally here is the user interface of our game. Here 9 pushbuttons arranged in 3*3 matrix manner. There are also 9 LEDs. The extra 1 button is the reset button of the game. The two LEDs on top of the button matrix is the winner and draw indicating LED.

## 3.3 Circuit Diagram

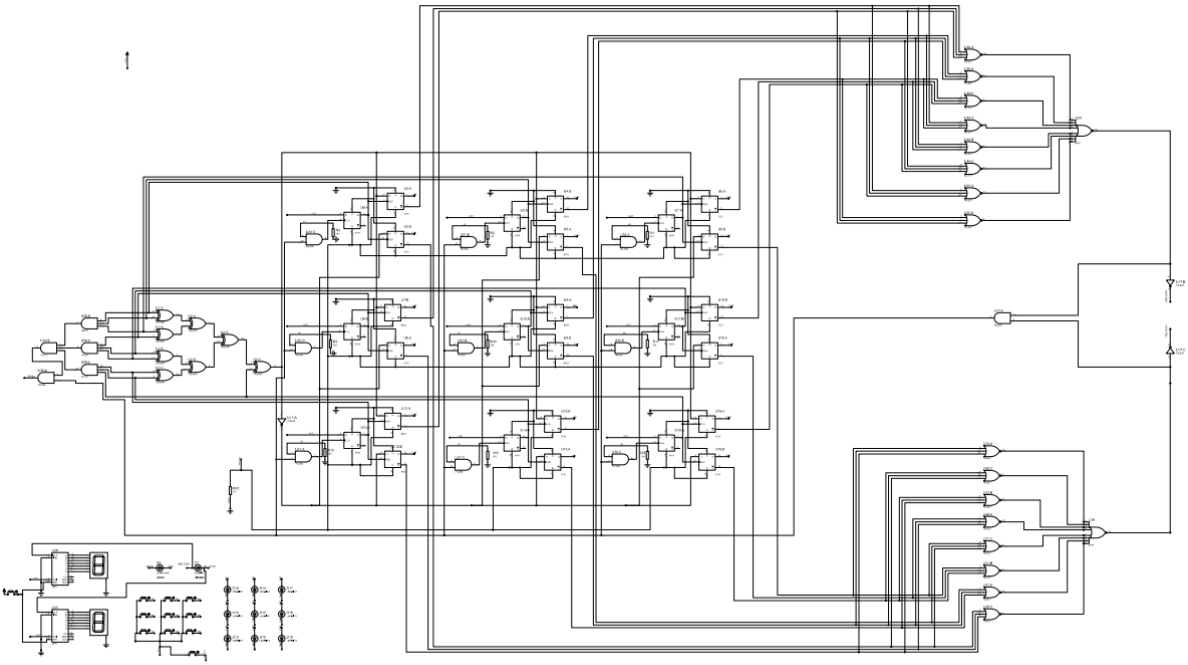

## 3.4 Simulation Model

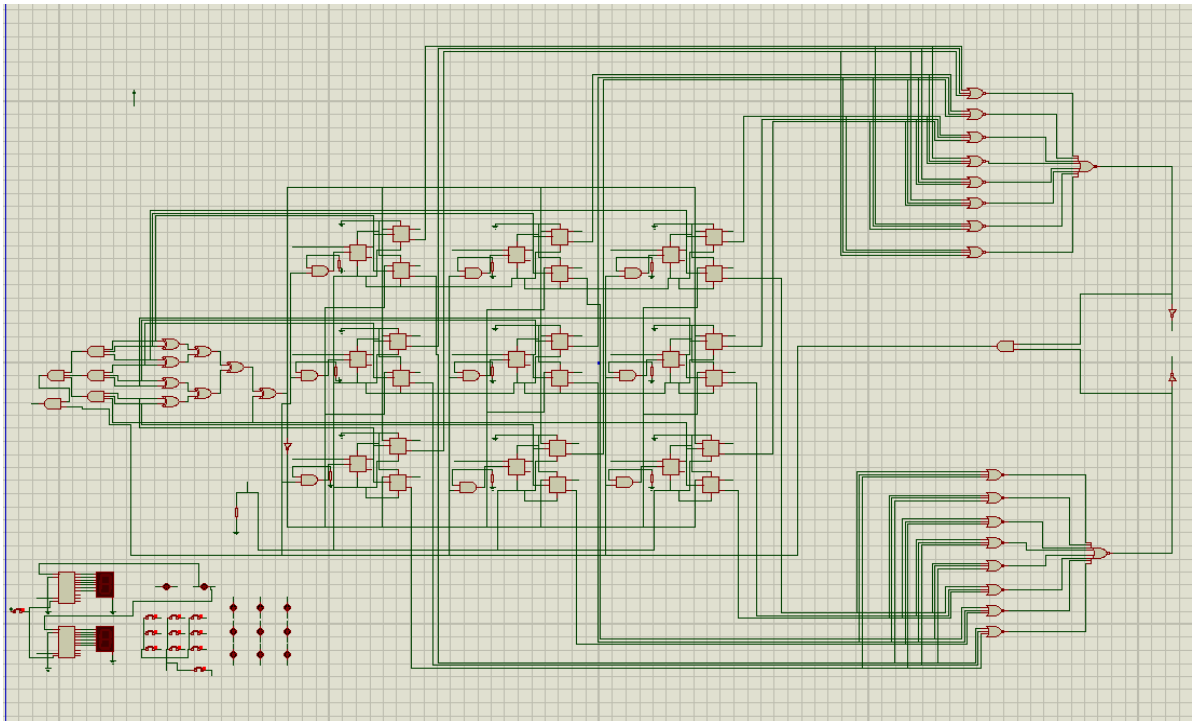

## 3.5 Hardware Design

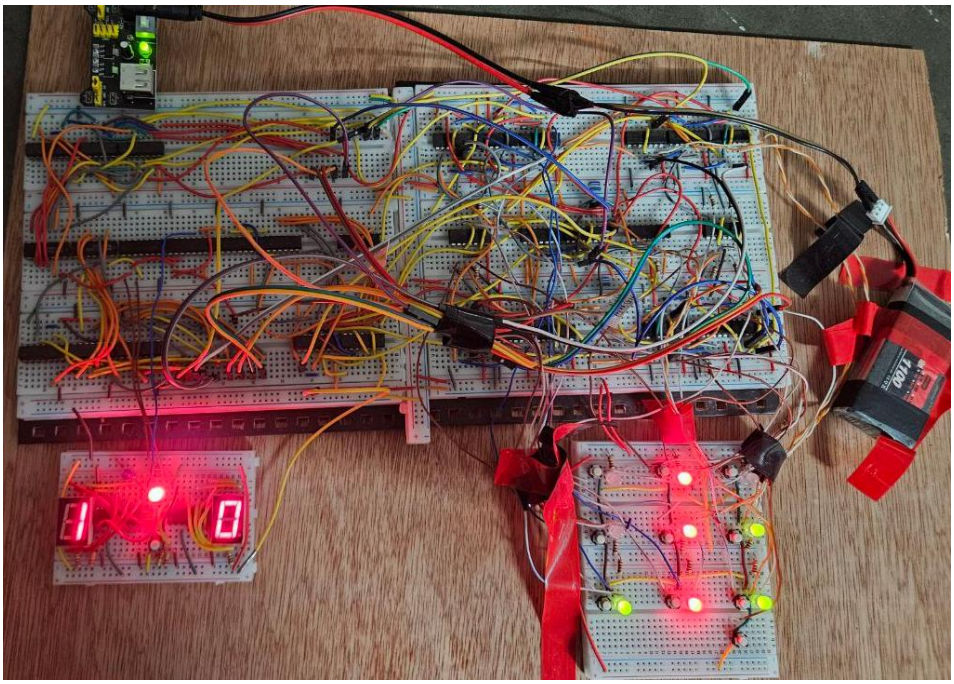

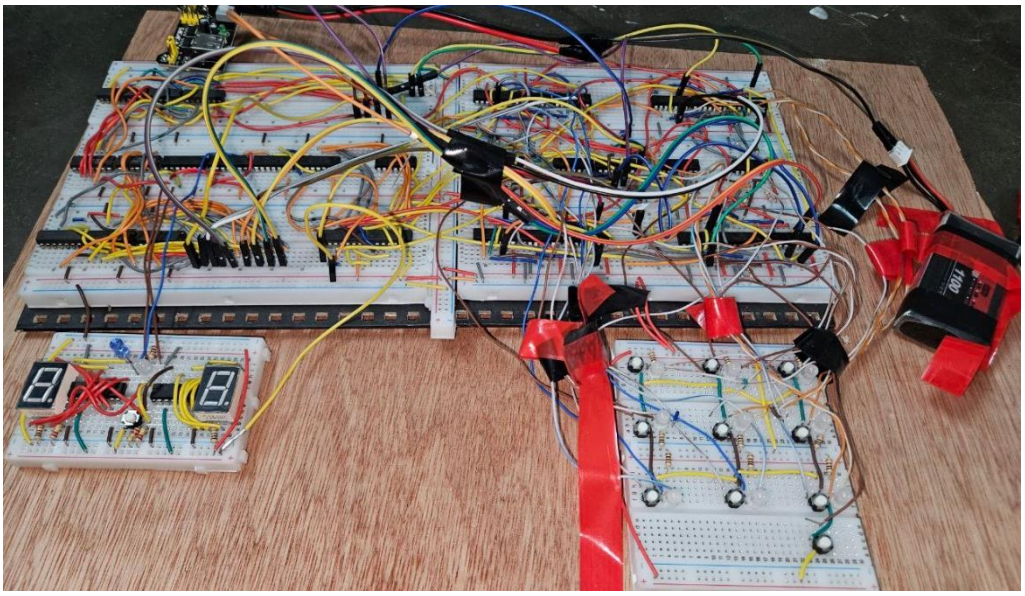

# 4 Implementation

## 4.1 Description

◦ Pushbuttons for input

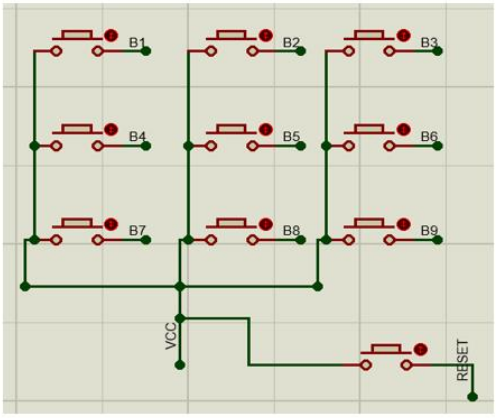


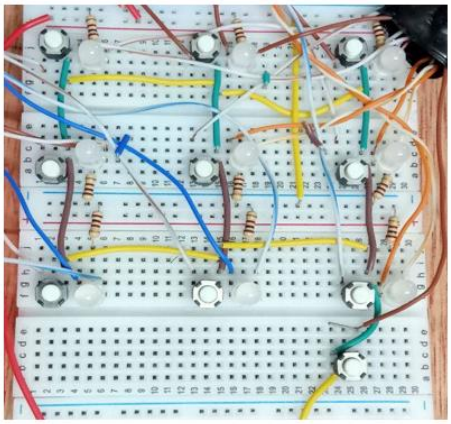

Simulation Hardware implementation

Here we can see that pushbuttons are arranged in 3*3 matrix manner. The 10th button in the bottom is the reset button.

◦ Flip flops to hold data

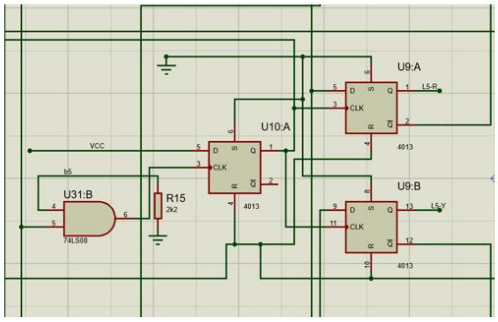


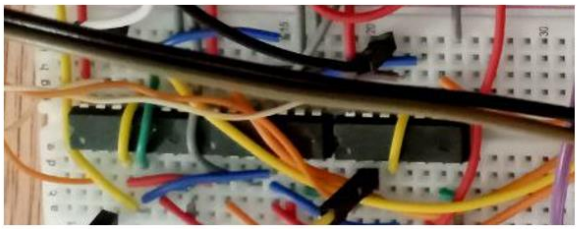

Simulation Hardware implementation

There are total 27 flip flops divided in 9 modules in the main design. But for understanding purpose, we have shown the simulation model and hardware implementation of one module only.

◦ XOR to toggle

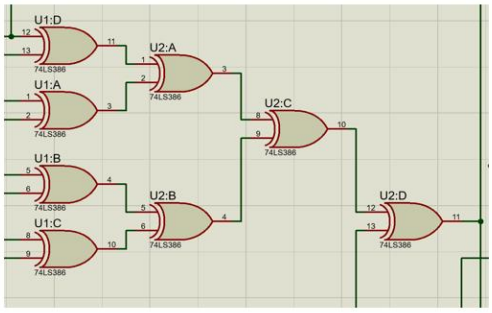


Simulation

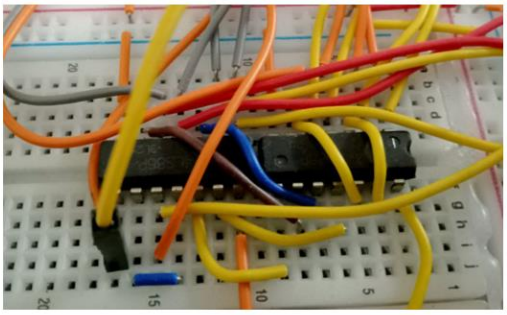

Hardware implementation

We can see here the XOR gate set which is used to alter LEDs after every move. As neither 4 nor 8 input gates are available, we have cascaded the 2 input XOR gates for the altering mechanism.

◦ Logics to detect winner

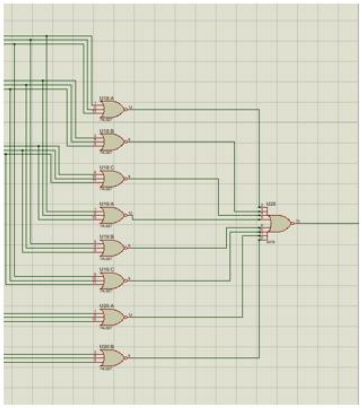

Simulation

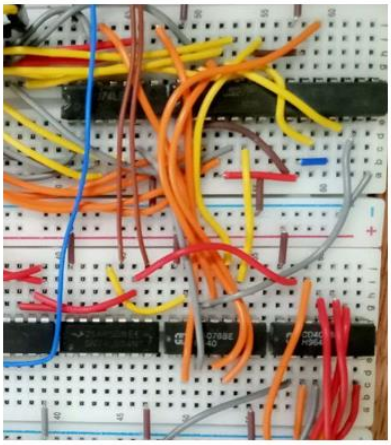

Hardware implementation

Here is the winner detection logic of one player. The NOR gates determine that whether the corresponding player has won the game or not.

◦ AND condition for draw

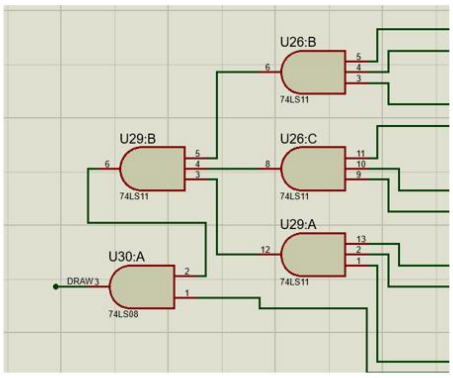


Simulation

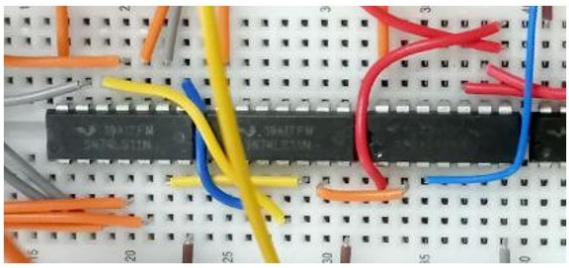

Hardware implementation

Here is the draw checker mechanism. If all the buttons have been pressed and no winner is decided yet, the game is a draw. The circuitry works in that manner.

# 5 Design Analysis and Evaluation

## 5.1 Novelty

The Tic Tac Toe Game project introduces a unique approach by employing a fully hardware-based design, constructed exclusively using basic logic gates and flip-flops. This departure from software-driven solutions highlights the application of fundamental Digital Logic Design (DLD) principles in a practical and interactive manner. The inclusion of hardware-based scorecards using counters further emphasizes the creative use of sequential circuits. Validation through both simulation in Proteus and physical implementation on breadboards ensures the robustness of the design. The modular and scalable nature of the project provides opportunities for future enhancements, such as integrating digital displays or advanced logic. This novel approach makes the project both educational and practical, aligning with core DLD objectives.

## 5.2 Design Considerations

### 5.2.1 Considerations to public health and safety

The project prioritizes safety by adhering to best practices in electrical and hardware design. Proper insulation and stable power supplies ensure user safety during operation. The hardware setup mitigates risks associated with loose connections or electrical faults by employing a systematic arrangement of components on breadboards. Additionally, the simplicity of the design makes it a safe educational tool for novice learners in electronics.

### 5.2.2 Considerations to environment

The project minimizes environmental impact by using reusable components such as breadboards, logic gate ICs, and flip-flops. These components can be repurposed for future projects, reducing electronic waste. Furthermore, the use of a low-power 5V DC supply ensures energy-efficient operation. The project's modularity supports sustainable practices by encouraging upgrades without discarding the entire setup.

### 5.2.3 Considerations to cultural and societal needs

This project addresses the societal need for accessible and engaging educational tools in electronics and digital logic design. By focusing on a universally recognized game like Tic Tac Toe, the project transcends cultural boundaries, making it relatable and inclusive. Its hardware-based nature aligns with hands-on learning practices, which are particularly valued in societies emphasizing practical education. The project fosters an appreciation for foundational engineering principles, promoting technological literacy.

## 5.3Limitations of Tools

Despite its successful implementation, the project faces several tool-related limitations. The use of breadboards introduces reliability concerns due to potential loose connections and signal noise. Logic gate ICs increase the circuit's complexity and occupy significant physical space, making scalability challenging. Flip-flops, while effective, limit large-scale integration without advanced tools like FPGAs. The dependency on a stable 5V DC power supply could disrupt operations during fluctuations. Furthermore, the absence of advanced testing tools limits the ability to detect subtle issues like timing delays or glitches, affecting the circuit's efficiency and reliability.

## 5.4Sustainability Evaluation

The project demonstrates a high degree of sustainability through its use of reusable and energy-efficient components. The modular design allows for future upgrades, reducing the need for new materials. By employing universally available hardware components, the project minimizes dependency on specialized resources, enhancing its replicability in diverse settings. Its emphasis on educational value ensures long-term utility, as it can be adapted for teaching and research purposes. However, the reliance on breadboards and basic ICs could limit scalability for larger, more complex systems. Addressing these limitations with more advanced and durable tools could further enhance the project's sustainability.

# 6 Reflection on Individual and Team work

Individual Contribution of Each Member

| Student Id | Contribution |
|---|---|
| 2006146 | Simulation ,Component Purcahse,Circuit Implemantation(Score Card),Debugging |
| 2006148 | Component Purcahse,Circuit Implemantation(Winning and draw condition),Debugging |
| 2006149 | Component Purchase,Circuit Implemantation(XOR toggle circuit) |
| 2006150 | Component Purcahse,Circuit Implemantation(Flip Flop Circuit),Debugging |

## 6.1 Mode of TeamWork

The **Tic-Tac-Toe** project was completed by a team with expertise in digital electronics and logic design. Team members collaborated on designing and simulating the logic circuits for the game using gates, flip-flops, and multiplexers. Communication was maintained through regular meetings and digital platforms like Slack to track progress and discuss challenges.

Each member was assigned specific tasks, such as designing the game logic, user input systems, and output displays. Digital simulation tools were used to test and refine the design. Throughout the project, the team worked closely together, troubleshooting issues and optimizing the final design. The success of the project was due to effective teamwork, clear communication, and coordinated efforts in developing the logic circuits.

## 6.2 Diversity Statement of Team

Our team recognizes the importance of diversity in fostering creativity, innovation, and problem-solving. The **Tic-Tac-Toe** project brought together individuals from diverse backgrounds, including different academic disciplines, cultural perspectives, and experiences. This diversity enriched our collaboration, enabling us to approach challenges from multiple viewpoints and find effective, innovative solutions.

The diversity within the team also ensured that we considered a variety of user perspectives and needs, making the project more inclusive. We believe that diverse teams are essential for developing solutions that are well-rounded, adaptable, and effective in real-world applications. As a team, we are committed to promoting diversity and inclusion, not only within our project but also in the broader field of technology and engineering.

## 6.3 Log Book of Project Implementation

| **Date** | **Milestone achieved** | **Individual Role** | **Team Role** | **Comments** |
|---|---|---|---|---|
| 20/08/24-23/09/24 | Literature Review | Everyone searched for innovative project ideas. | | |
| 23/09/24 | Proposal Submitted | Md. Jaied Hasan: Prepared initial concept. | | Submitted 3 proposals. |
| 23/09/24 | Proposal Accepted | Md. Moshahed Parvez: Assisted with refinements. | | |

| | | | | |
|---|---|---|---|---|
| 15/10/24 | Simulation Completed | Md. Jaied Hasan: Worked on simulation and debugging. | | Tested initial circuit behavior. |
| 22/10/24 | Input Circuit Built | Sad Sami: Designed flip-flop-based input circuit. | | Input setup completed. |
| 25/10/24 | XOR Toggle Circuit | Nafis Ahmad: Built XOR gate toggle set. | | |
| 10/11/24 | Winning/Draw Circuit | Md. Moshahed Parvez: Built winning/draw condition circuit. | | |
| 06/12/24 | Scorecard Implementation | Md. Jaied Hasan: Built scorecard circuit. | Functional score tracking. | |
| 19/12/24 | Project Completed | | Final testing and validation. | Successfully completed. |

# 7 Communication to External Stakeholders

## 7.1 Executive Summary

The **Tic-Tac-Toe** project aimed to design and implement a functional game using **Digital Logic Design (DLD)** principles. The project involved creating a digital circuit-based system that could simulate the classic Tic-Tac-Toe game, incorporating key components such as logic gates, flip-flops, and multiplexers. The primary objective was to use DLD techniques to develop a game that could detect player moves, display the game state, and determine the winner based on predefined logic.

The project was carried out by a team with expertise in digital electronics and logic design, who worked together to design the game board logic, input/output systems, and the circuitry needed to implement the game's rules. Using digital simulation tools, the team tested the circuit design, making iterative improvements to ensure accuracy and functionality.

Through effective teamwork and collaboration, the project successfully delivered a fully functional Tic-Tac-Toe game that operates entirely on digital logic components, demonstrating the practical application of theoretical digital design concepts. This project not only reinforced the team's understanding of logic circuit design but also showcased the ability

to implement complex systems using fundamental digital logic principles.

## 7.2 User Manual

Step 1: Turn on the System

- Power up the system using the main power switch.
- The game board will initialize, and the LEDs will show an empty board (all lights off).

Step 2: Player Input

- Players take turns to make their move on the game board.
- The system is controlled via switches or buttons that correspond to specific positions on the grid. Each switch represents a square on the 3x3 board.
- **Player 1 (X)** starts first and presses the button corresponding to an empty square on the board.
- **Player 2 (O)** follows by pressing a button corresponding to another empty square.

Step 3: Game Board Display

- After each move, the system updates the display:
    - **Player X** will be represented by an LED in one color (e.g., red).
    - **Player O** will be represented by an LED in another color (e.g., blue).
- The board is updated immediately after each move.

Step 4: Determining the Winner

- The system continuously checks for a winner after each move.
- A player wins if they manage to place three of their marks (X or O) in a row, column, or diagonal.
- The system will display the winner using a special indicator (such as a flashing LED) or a message on the display.

Step 5: Resetting the Game

- To start a new round, press the **Reset Button** to clear the game board and reset the game state. The board will return to the initial state, and the game will be ready for the next round.

# 8 Project Management and Cost Analysis

## 8.1 Bill of Materials

| Component Name | Cost Per Component |
|---|---|
| 74LS04 (2) | 50 |
| 74LS08 (4) | 120 |
| 74LS11 (3) | 150 |
| 74LS27 (7) | 245 |
| CD4013 (16) | 400 |
| CD4078 (3) | 40 |
| CD4026 (3) | 90 |
| 74LS86 (4) | 140 |
| Resistor (25) | 10 |
| 7 Segment (2) | 40 |
| Breadboard (8) | 800 |
| Jumper Box (3) | 360 |
| Bi-color LED (12) | 72 |
| Breadboard Power Supply Module (1) | 80 |
| Push Button (11) | 55 |
| Jumper Wires | 300 |
| Battery (1) | 1300 |
| Total Cost Per Prototype | 4250 |

## 8.2 Timeline of Project Implementation

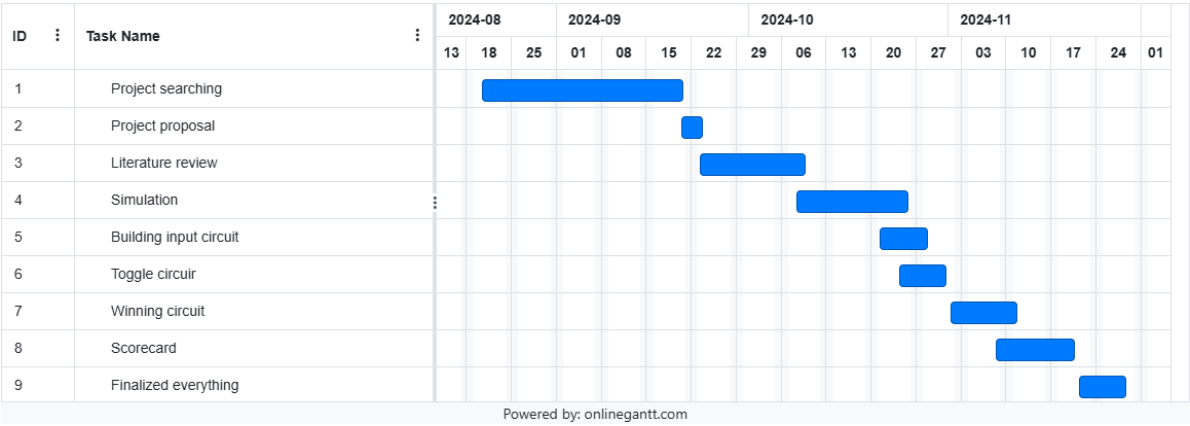


*Gantt chart of project implementation*

# 9 Future Work

### 1. Low-Power Design: Future Trends

As digital systems continuing to shrink in size and growing in complexity, low-power design becoming more critical, especially in portable and battery-operated devices like mobile devices, and embedded systems. Future aspects of low-power design including:

- **Energy-Efficient Hardware:** Advances in CMOS technology and the developing of energy-efficient logic gates are enabling even lower power consumption in digital circuits. Ultra-low-power flip-flops and more energy-efficient state retention techniques can be integrated into projects like Tic-Tac-Toe.

- **Dynamic Voltage and Frequency Scaling (DVFS):** Future designs incorporating DVFS, where the circuit's voltage and frequency dynamically adjusting based on the current workload or activity. Power reductions are enabled when the game idling or during periods of low activity which can make our project more efficient.

- **Power Gating and Power Management:** Power gating techniques allowing sections of the circuit that are not in use to be turned off. Sophisticated power management circuits can be implemented to switch off inactive parts of the Tic-Tac-Toe game.

### 2. Use of Sequential Circuits: Evolving Applications

Sequential circuits, which forming the backbone of tracking game state, turn management, and winning conditions, seeing advancements in how they designing and implementing. Future trends might including:

- **Reconfigurable Logic:** With the increasing use of Field-Programmable Gate Arrays (FPGAs), more flexible sequential circuits utilizing, making it possible for Tic-Tac-Toe designs to be reconfiguring for different hardware platforms.

- **Hybrid Sequential and Combinational Circuits:** As digital logic moving toward mixed-signal circuits (combining analog and digital components), hybrid designs being adopted, offering more efficient state changes and processing.

- **State Machine Optimization:** Sequential circuits like finite state machines (FSM) continuing to evolve with optimizations in design tools, allowing FSMs to be automatically generating with less energy usage and greater efficiency. Complex game rules and features supporting in the future.

- **Advanced Clocking Strategies:** Future designs exploring clockless sequential circuits or asynchronous logic, reducing power and complexity by eliminating the need for global clocks. These approaches being considered for systems requiring real-time performance.

### 3. Error Detection and Correction: Next-Gen Technologies

As digital systems continuing to be used in critical applications (e.g., space, healthcare, autonomous vehicles), error detection and correction becoming more vital. Future developments might involving:

- **Error-Resilient Logic:** Future digital designs increasingly adopting fault-tolerant and error-resilient circuits. Hardware faults, environmental noise, or power fluctuations can be handled by these designs to ensure reliable operation.

- **Adaptive Error Correction:** With more sophisticated hardware and AI-driven solutions, adaptive error correction algorithms can be integrated directly into hardware. Errors detected and corrected based on data patterns observed during gameplay or user interactions.

### 4. Signal Integrity Analysis: Advanced Strategies

Signal integrity continuing to be a key concern as circuit speeds increasing and data rates growing in both consumer and industrial electronics. Future advancements in signal integrity might including:

- **Advanced Simulation Tools:** User friendly and more accurate simulation tools can be used in our project to enhance it's user compatibility.

- **Real-Time Signal Monitoring**: On-chip monitoring systems are becoming more sophisticated, allowing real-time signal integrity analysis. Signal paths automatically can be adjusted to compensate for noise or degradation, being especially valuable in high-speed designs, like those used in gaming systems.

### 5. Education and Training Tool: Future Opportunities

As technology advancing, the role of digital logic designs in education and training also evolving. Future aspects including:

- **Gamification and Interactive Learning:** We can integrate Tic-Tac-Toe into educational platforms that use gamification techniques to teach logic design.

- **AI-Assisted Design Learning:** As AI becoming integrated into educational systems, students are receiving help designing digital circuits for games like Tic-Tac-Toe. Suggestions, troubleshooting, and optimization for power consumption or error detection being automated.So our project may help on that.

- **Augmented Reality (AR) and Virtual Reality (VR):** These technologies are enhancing the learning experience by allowing students to visualize and interact with digital circuits in 3D environments. Virtual circuits being manipulated, and design changes being observed in real-time, making learning more interactive.In future we can work on implementing VR and AR to enhance our game.

# 10 References

https://prezi.com/p/pr72azdjpwlw/tic-tac-toe-using-logic-gates/

https://www.multisim.com/content/JxmLab4LSS3Kvax8ZUahgC/tic-tac-toe-v11/

https://www.nutsvolts.com/magazine/article/build-an-electronic-tic-tac-toe-game

https://www.secs.oakland.edu/~llamocca/Courses/ECE2700/W18/FinalProject/Group10_TictactoeLEDs.pdf